GEMS
Island Grid+ Solution

SPECIFICATION SHEET

Island grids present a unique set of challenges, particularly the need for reliable energy to provide critical power needs. The Wärtsilä Island Grid+ Solution is a comprehensive package suite that empowers the renewable modernisation of island grids using a variety of generation assets. The result is both economic and environmental benefits for grid-scale capabilities for localised energy.

SOLUTION ADVANTAGES

- **Minimise levelised cost of energy** (LCOE) by reducing fuel consumption and maximising renewable generation.
- **Improved grid quality** by adding fast responding battery assets to the island grid.
- **Improved grid safety** by optimising asset dispatching and maintaining reserve levels.
- **Predictable energy generation** using both load and renewable energy (RE) generation forecasting.
- **Transparent insights** through use and versatility of the GEMS Island Grid+ HMI, API, and SCADA capabilities to smartly manage and optimise various assets under a single portfolio.
- **Industry-leading expertise** in Wärtsilä's experience in renewable power generation, energy storage, energy asset control, and computing technologies.

KEY SOLUTION COMPONENTS

- **Wärtsilä GEMS power plant controller** (PPC) software for generation asset control, local operation, monitoring, protection and data collection on site installed in the **GEMS Rack**.
- **Wärtsilä GEMS Grid Controller** (GC) software for microgrid control installed in the **GEMS Rack**.
- **Wärtsilä GEMS Fleet Director** (FD) software for multi-plant fleet management, remote control, data analytics, forecasting installed in the cloud.
- **Wärtsilä Energy Storage System** (ESS) with **GridSolv** as comprehensive battery energy storage system.

SOLUTION FEATURES

- **Tertiary Control** dispatches engines, batteries, and renewable generation assets at any given time to achieve the best possible economic optimisation and meet grid safety reserve requirements, while observing the operational constraints of all assets.
- **Secondary Control** maintains high grid quality by distributing real and reactive powers across all running engines and ESS units.
- **Primary Response** is provided by engine governors and the Wärtsilä ESS, with the droop set points by the GEMS PPC. The ESS's fast power electronic control allows batteries to effectively regulate frequency and voltage when facing large load steps or renewable power ramps.
- **Renewable Energy Forecast** uses weather forecasts to compute the expected AC power generation from solar and wind assets using statistical models, including physics-based models, non-parametric machine learning, and advanced parametric regression techniques.
- **Load Forecast** is conducted based on load types (residential vs. industrial). Machine learning is used to predict the load, which enables predictions to get progressively more accurate over time.
- **Emergency Handling** reacts to plant failures, unexpected renewable generation interruptions or load changes to ensure grid reliability.

WÄRTSILÄ SERVICES AVAILABLE

- System design
- Full EPC
- Energy study and asset sizing to optimise CAPEX and OPEX
- Circuit study
- Solution function tailoring to meet site specific needs
- SCADA and UI customisation to meet customer requirements
- Site commissioning
- Site network cyber security assessment
- Virtual simulation and cloud-based training targeting operators, administrators and analysts
- Remote monitoring, operation and maintenance services

GEMS HMI EXAMPLES

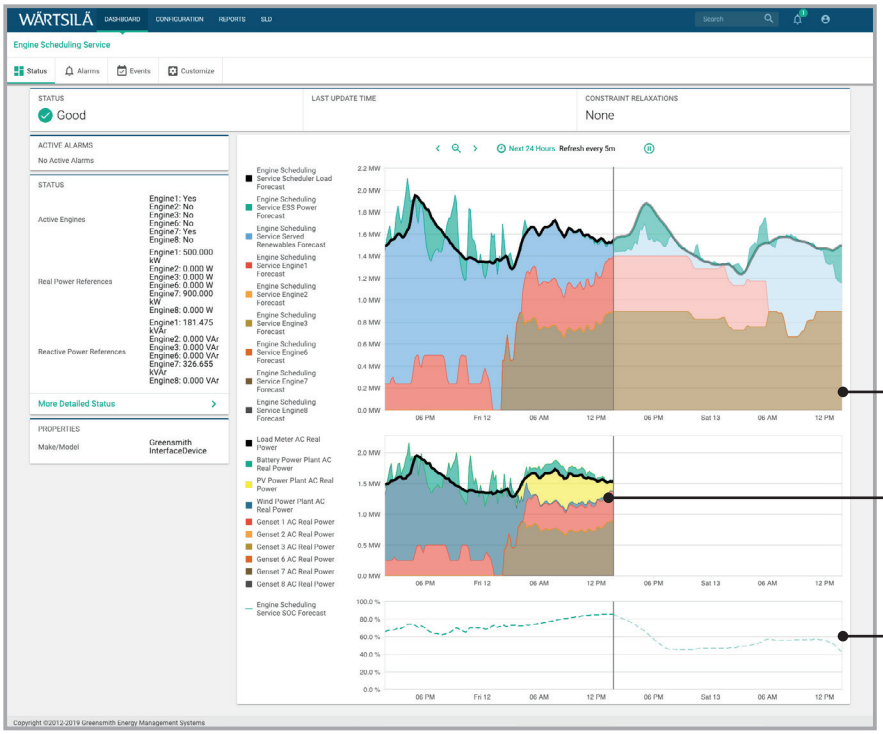

A GEMS dashboard illustrating monitoring and reporting capabilities: generation stack, Engine Dispatch Schedule, load and renewable forecasts. The GEMS HMI shown here gives insight into historic and forecasted asset loading via a stacked power plot.

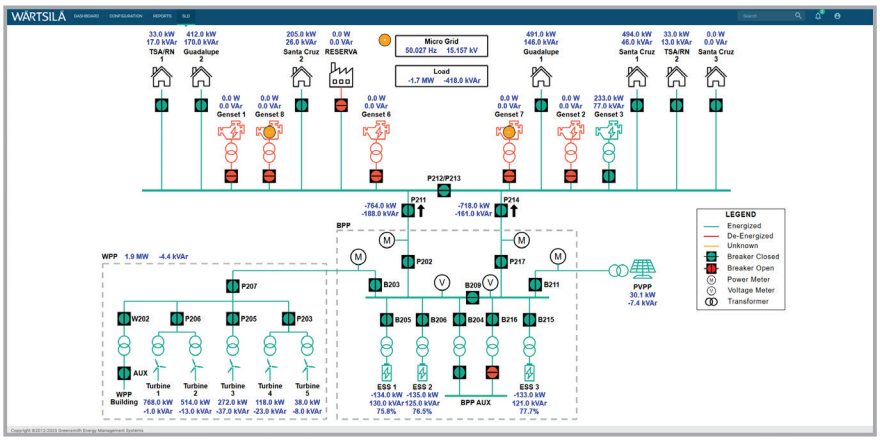

GEMS platform capabilities include 24/7 grid monitoring, including detailed SLDs.

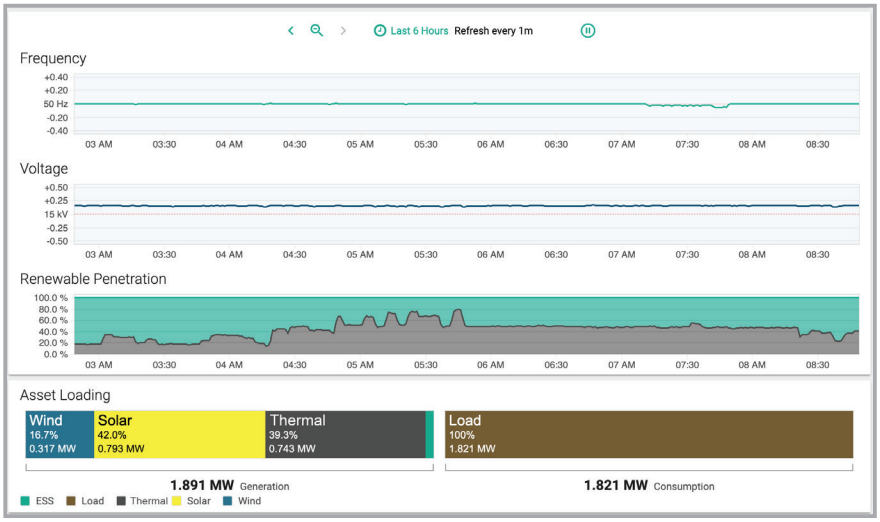

Wärtsilä's GEMS can monitor all assets within a system, such as Energy Contribution Monitoring. The GEMS HMI dashboard shows data such as grid quality, renewable penetration, and asset loading.

04.2020

wartsila.com